HYSTERESIS BRAKE H140 - 2

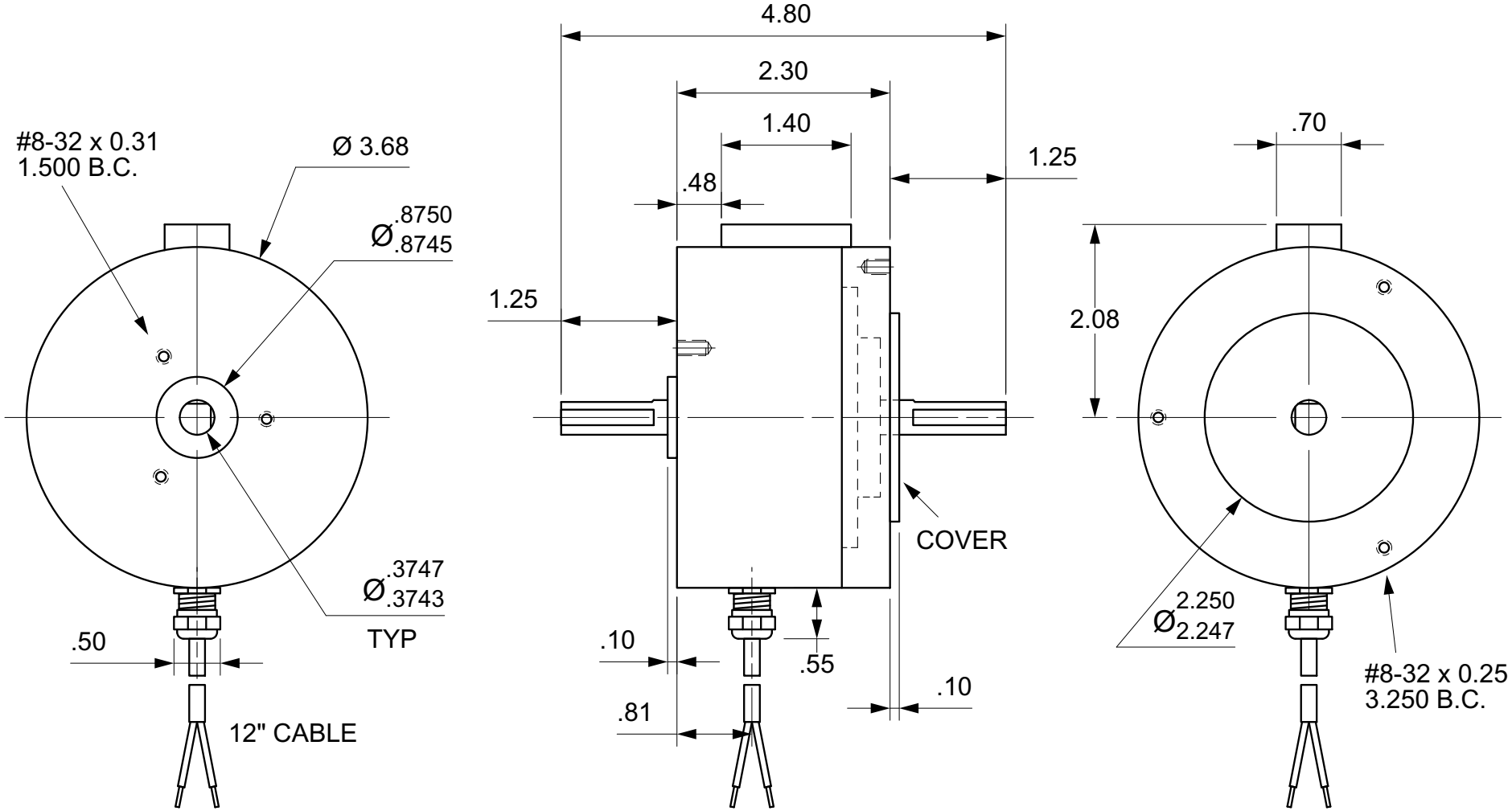

Units : inches
Scale : 60%

Drawn 9/27/01
Changed 9/27/01

Lake Placid, NY USA
Telephone 518 523-2422
www.placidindustries.com

PLACID INDUSTRIES