# MAGNETIC PARTICLE BRAKE KB-5

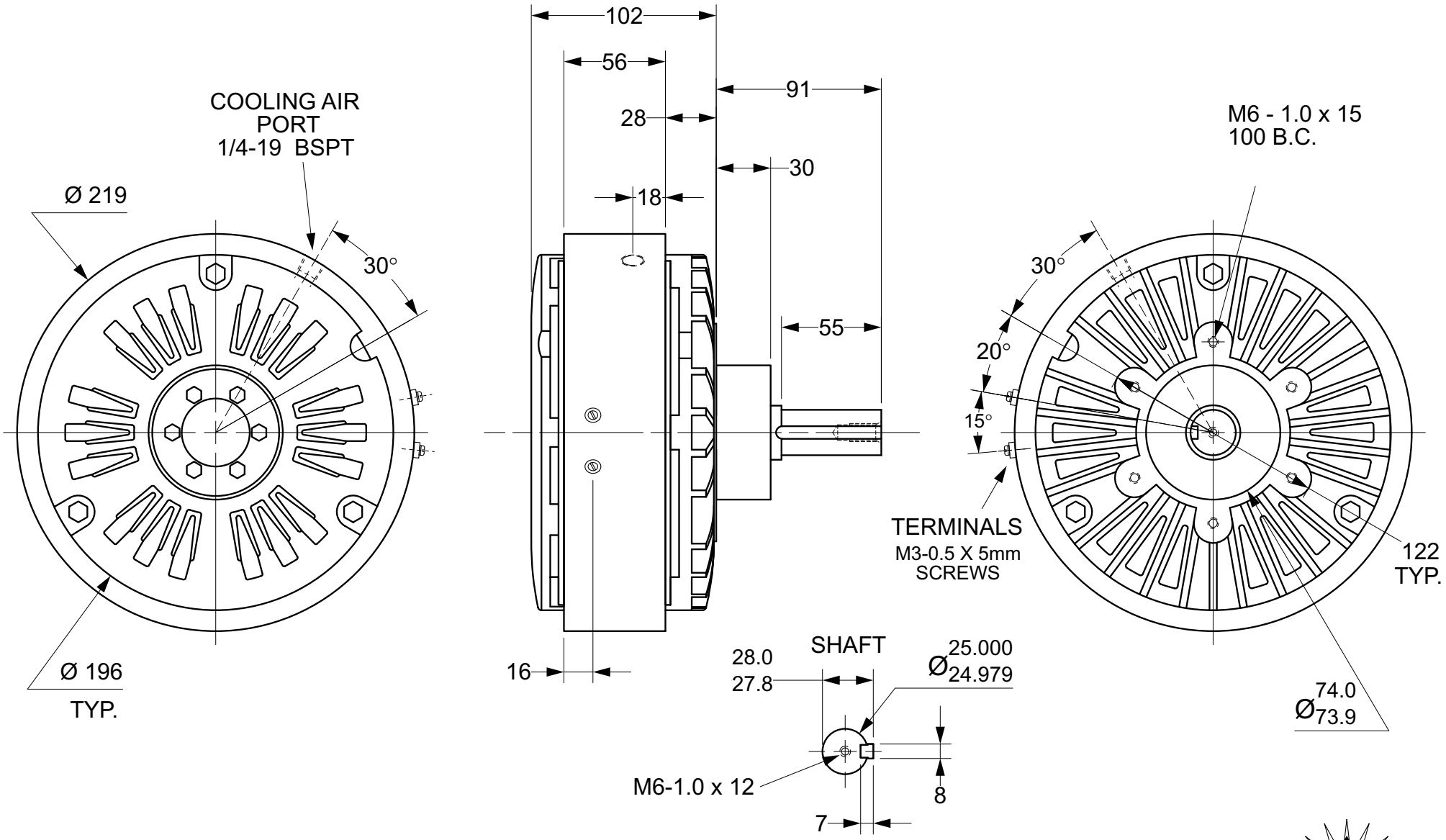


Units : inches
Scale : 1/3

Drawn 4/20/03
Changed 12/3/04


Lake Placid, NY USA
Telephone 518 523-2422
www.placidindustries.com


PLACID
INDUSTRIES