MAGNETIC PARTICLE BRAKE KB-5

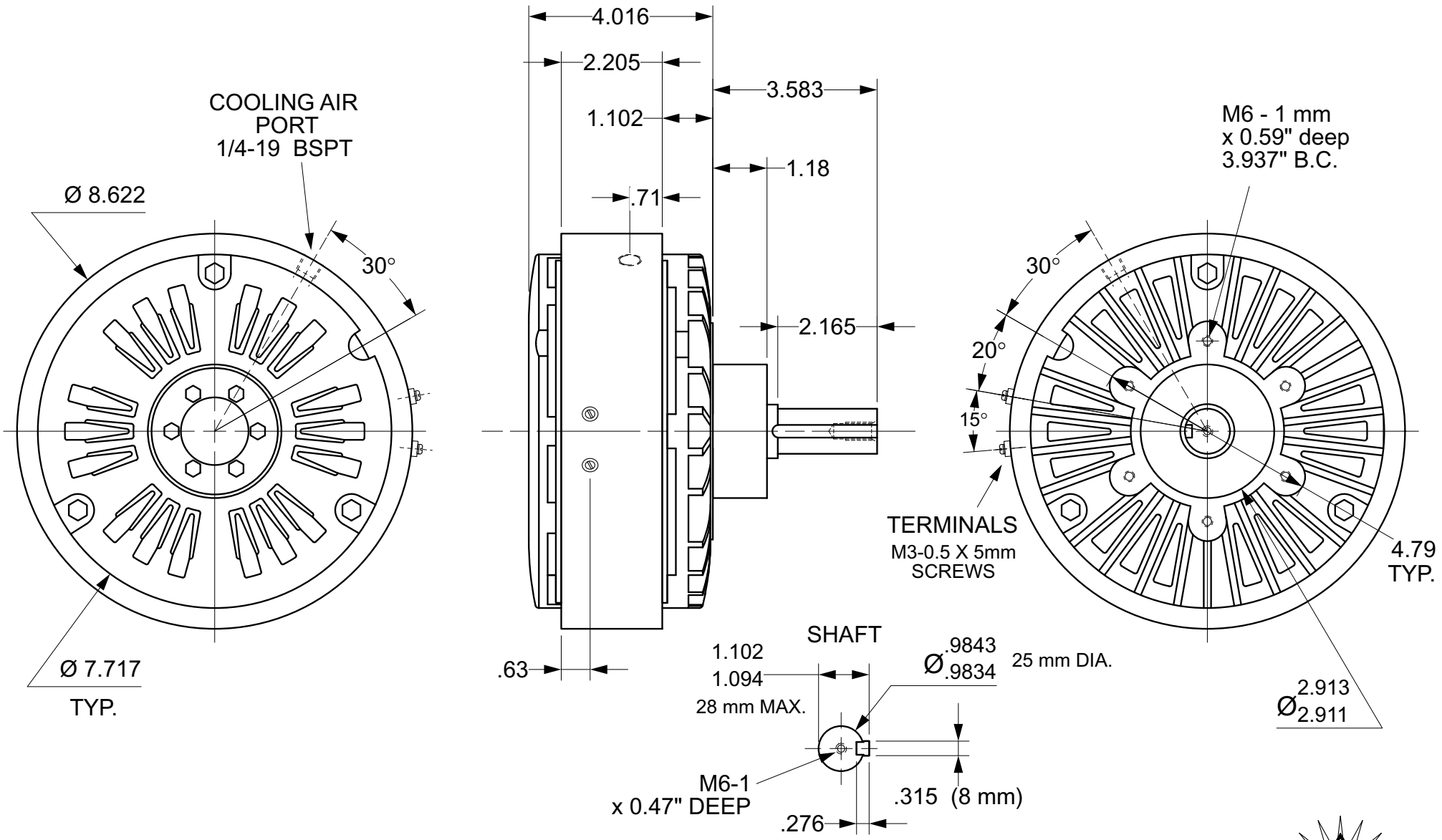

Units : inches
Scale : 1/3

Drawn 4/20/03
Changed 12/3/04

Lake Placid, NY USA
Telephone 518 523-2422
www.placidindustries.com

PLACID
INDUSTRIES