MAGNETIC PARTICLE CLUTCH KC-2.5

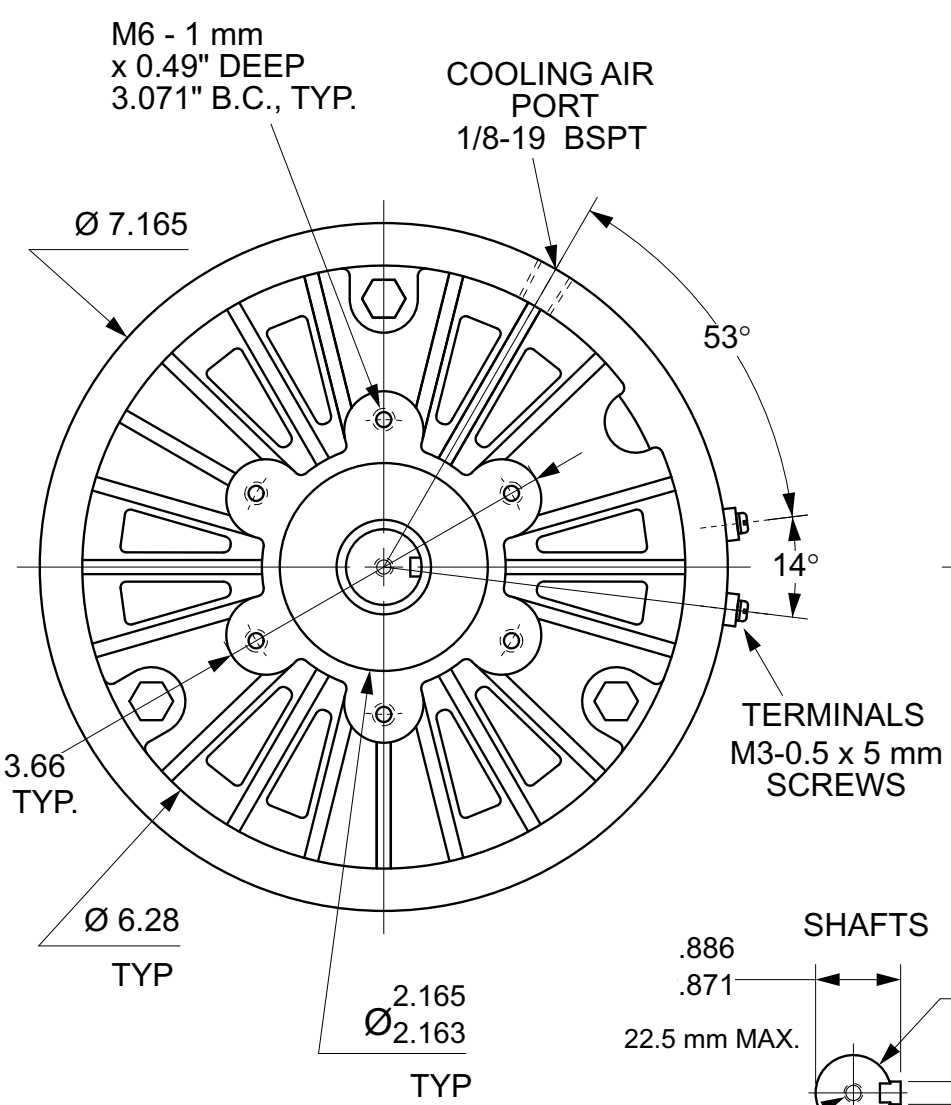

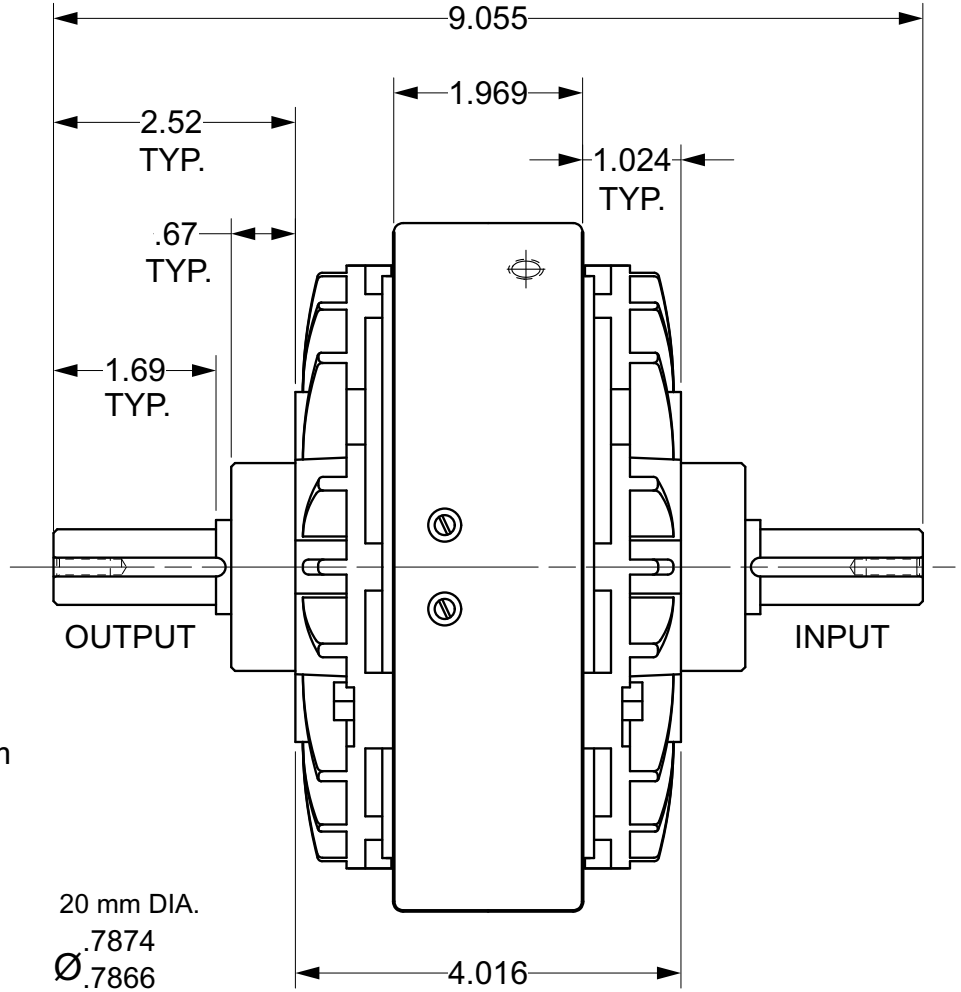

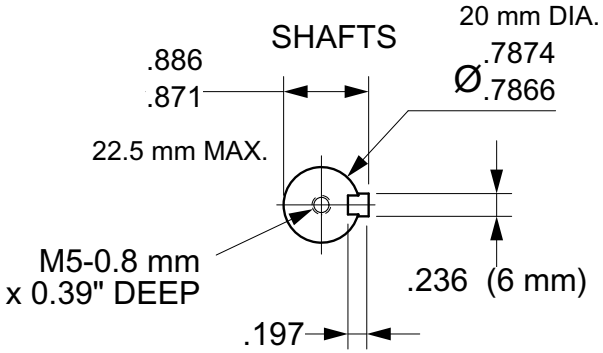

Units : inches
Scale : 40%

Drawn 1/13/04
Changed 1/28/05

Lake Placid, NY USA
Telephone 518 523-2422
www.placidindustries.com

PLACID INDUSTRIES