MAGNETIC PARTICLE CLUTCH POC-200

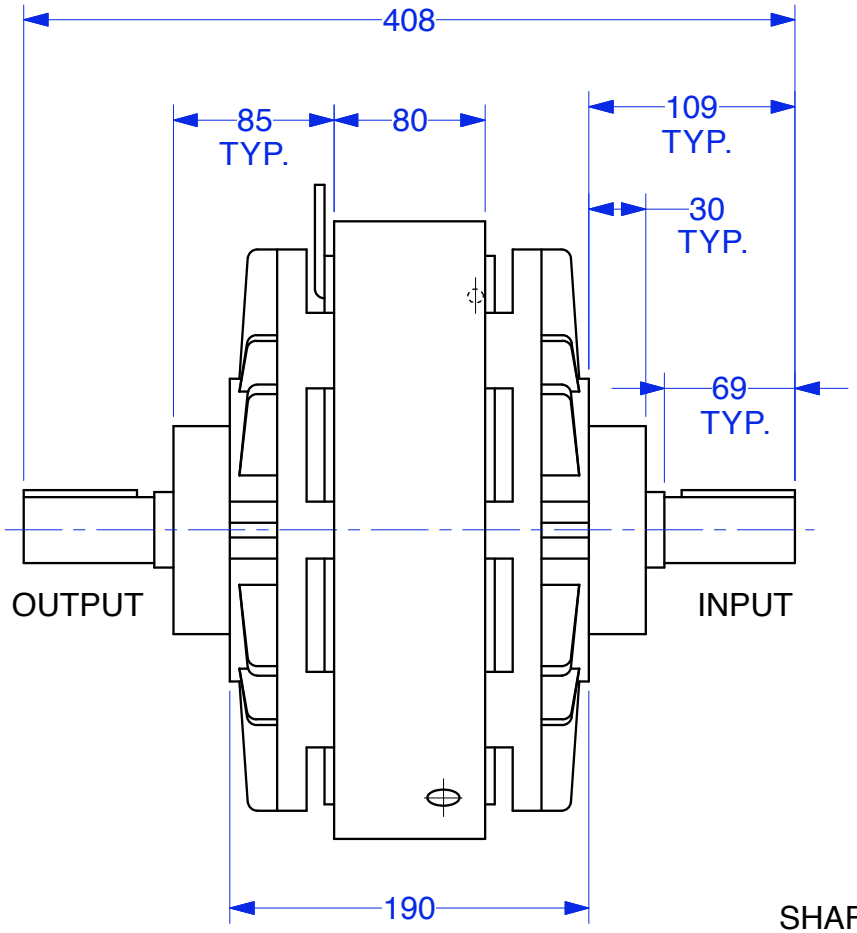

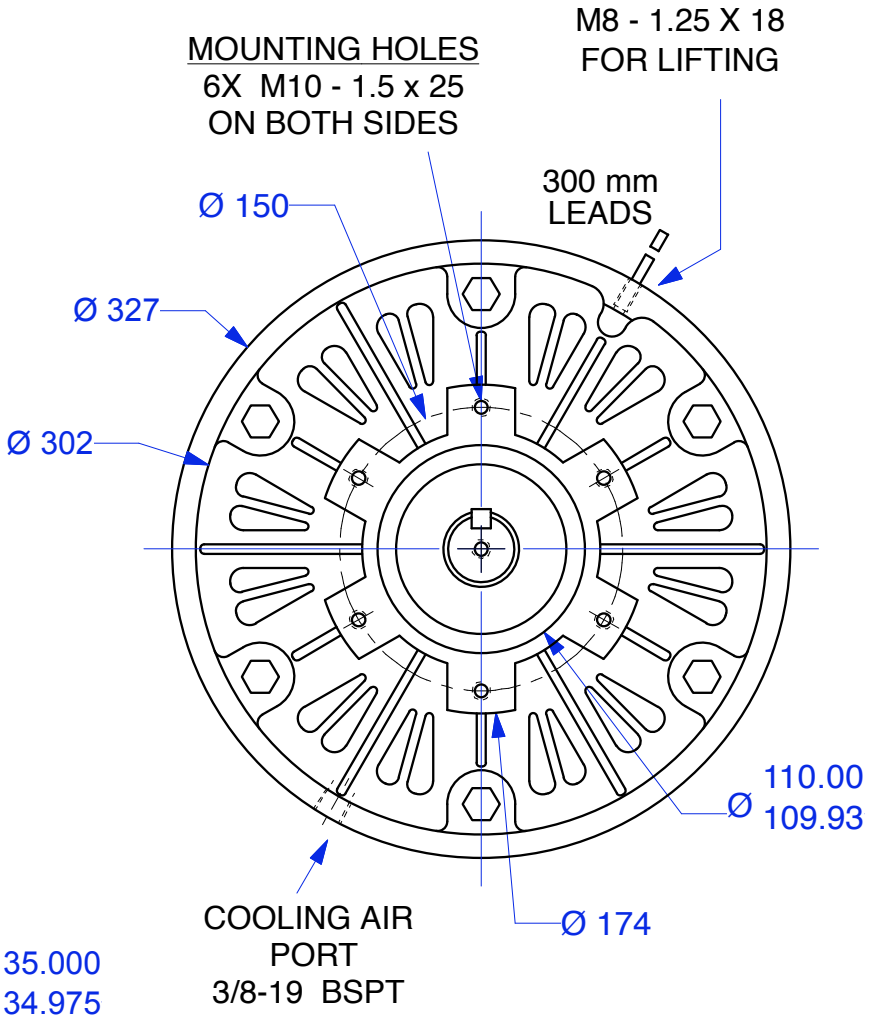

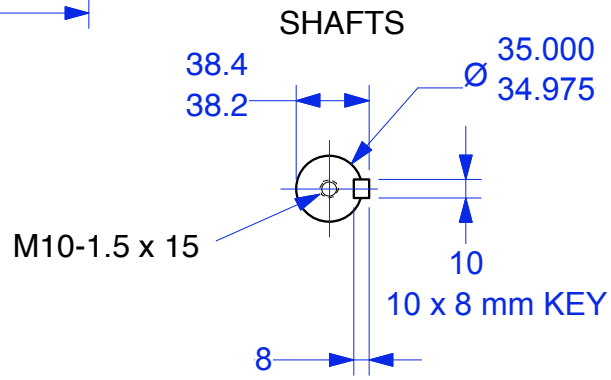

Units : mm
Scale : 1/4

Drawn 12/8/08
Changed 5/29/10

Lake Placid, NY USA
Telephone 518 523-2422
www.placidindustries.com

PLACID INDUSTRIES